MOD22N

Motor Mechanism

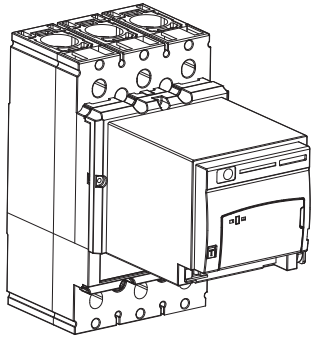

Noark

A

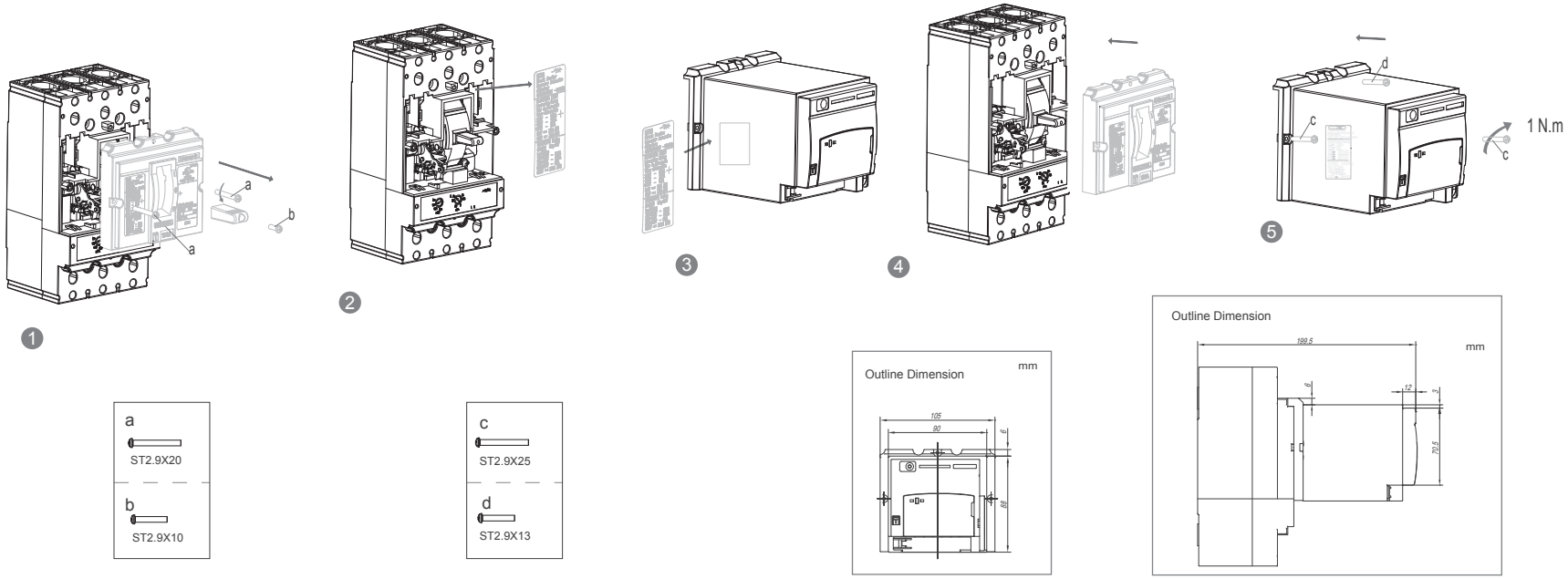

B

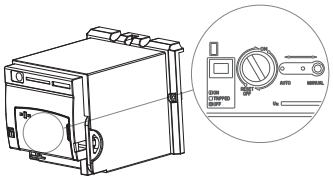

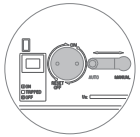

Motor-Operating

Hand-Operating

C

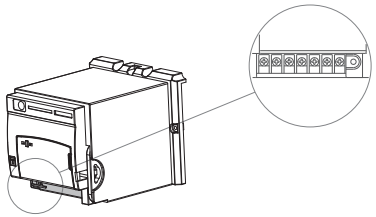

1

	P1(+)	P2(-)	S1	S2	S3
	POWER Us		ON	OFF	

2

D

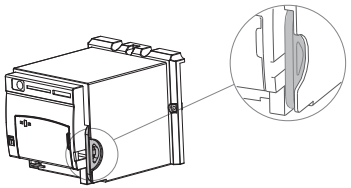

1

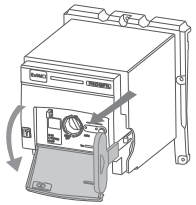

2

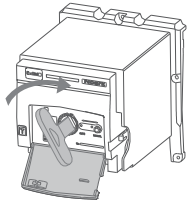

3

E

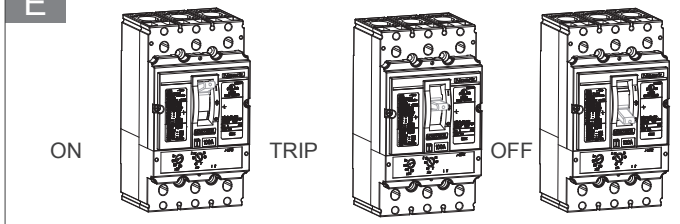

ON OFF

Printed with environment-friendly paper

Copyright Noark. All Rights Reserved

www.noark-electric.com

Noark

ZMOD22N201404NA